INSTRUCTION MANUAL

D1xS1

Alarm Horn Sounder

Class II/III, Zone 20

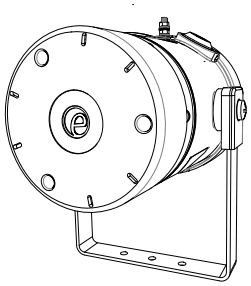

D1xS1R

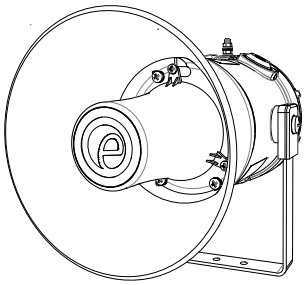

D1xS1F

1) Product Table

Unit Type Code	Nominal Input Voltage	Nominal Input Current	Voltage Range	Sound Pressure Level dB(A)	
				Max*	Nom.†
D1xS1RDC024-D	12Vdc	221mA	11.5-54Vdc	94	90
	24Vdc	185mA			
	48Vdc	115mA			
D1xS1RAC230-D	115Vac	73mA	100-240Vac 50/60Hz		
	230Vac	48mA			
D1xS1FDC024-D	12Vdc	221mA	11.5-54Vdc	98	94
	24Vdc	185mA			
	48Vdc	115mA			
D1xS1FAC230-D	115Vac	73mA	100-240Vac 50/60Hz		
	230Vac	48mA			

*Max = Tone 4
†Nom. = Tone 44

The table shows the input current taken by the various sounders.
The current levels shown above are for the 440Hz Continuous tone @ nominal input voltage.
Nominal current at nominal voltage.

Table 1: Electrical Ratings.

2) Warnings

CAUTION
TO REDUCE THE RISK OF IGNITION OF HAZARDOUS ATMOSPHERES:
DISCONNECT FROM SUPPLY BEFORE OPENING.
KEEP TIGHTLY CLOSED WHEN IN OPERATION.
WARNING
FIT SEALING FITTING IN CONDUIT RUNS WITHIN 18 INCHES FROM ENCLOSURE.
EQUIPMENT MUST NOT BE INSTALLED WITH THE HORN FACING UPWARDS OF HORIZONTAL
DO NOT OPEN WHEN AN EXPLOSIVE ATMOSPHERE IS PRESENT
DO NOT OPEN WHEN ENERGISED
POTENTIAL ELECTROSTATIC CHARGING HAZARD - CLEAN ONLY WITH A DAMP CLOTH
ENCLOSURE ENTRIES: TWIN M20 X 1.5 / SINGLE 1/2" NPT
ATEX/IECEx INSTALLATIONS: IF TEMPERATURE EXCEEDS 70°C AT ENTRY OR 80°C AT BRANCHING POINT USE SUITABLE RATED CABLE AND GLANDS

ATTENTION
POUR REDUIRE LE RISQUE D'INFLAMMATION DES ATMOSPHÈRES DANGEREUSES :
COUPER L 'ALIMENTATION AVANT OUVERTURE.
CONSERVER FERMÉ PENDANT LE FONCIONNEMENT.
AVERTISSEMENT
CONDUITS DOIVENT ETRE SCELLES EN MOINS DE 18 POUCES.
ÉQUIPEMENT NE DOIT PAS ETRE INSTALLE AVEC LE KLAXON TOURNEE VERS LE HAUT DE HORIZONTAL.
NE PAS OUVRIR UN PRESENCE D'ATMOSPHERE EXPLOSIVE
NE PAS OUVRIR ENERGIE
DANGER POTENTIEL CHARGE ÉLECTROSTATIQUE - NETTOYER UNIQUEMENT AVEC UN CHIFFON HUMIDE
ENTRÉES DE BOÎTIER: 2 x M20 X 1.5 / 1 x 1/2" NPT
ATEX/IECEx INSTALLATIONS: SI LA TEMPÉRATURE DÉPASSE 70 °C À L'ENTRÉE OU 80 °C AU POINT DE BRANCHEMENT, UTILISER UN CÂBLE ET DES JOINTS D'ÉTANCHÉITÉ APPROPRIÉS

3) Marking & Rating Information

The D1xS1 Alarm Horns comply with the following standards for hazardous locations:

3.1 Class/Division Ratings for US & Canada

Standards	
Class I UL 1203 & CSA C22.2 No 25-1966	
Class Division Ratings for US (NEC)	
Model No:	**Rating**
D1xS1-DC024-D / D1xS1-AC230-D	Class II Div 1 FG T6 Ta -55°C to +70°C Class III Div 1 Ta -55°C to +70°C
Class Division Ratings for Canada (CEC)	
Model No:	**Rating**
D1xS1-DC024-D	Class II Div 1 FG T6 Ta -55°C to +70°C Class III Div 1 Ta -55°C to +70°C
D1xS1-AC230-D	Class II Div 1 FG T6 Ta -55°C to +40°C Class III Div 1 Ta -55°C to +40°C
Class Zone Ratings for US (NEC)	
Model No:	**Rating**
D1xS1-DC024-D / D1xS1-AC230-D	Class II Zone 20 IIIB T6 Ta -55°C to +70°C
Class Zone Ratings for Canada (CEC)	
Model No:	**Rating**
D1xS1-DC024-D	Class II Zone 20 IIIB T6 Ta -55°C to +70°C
D1xS1-AC230-D	Class II Zone 20 IIIB T6 Ta -55°C to +40°C
Installation must be carried out in compliance with the National Electric Code / Canadian Electric Code	
Ambient Temperature Range	
-55°C to +70°C (-67°F to +158°F)	
IP Rating	
IP66 to EN60529 4 / 4X / 3R / 13 to UL50E / NEMA250	

4) Special Conditions for Safe Use

To access the Ex d chamber, loosen the M4 grub screw on the sounder cover. Open the enclosure by turning the sounder cover counterclockwise and remove the cover.

Electrical connections are to be made into the terminal blocks on the PCBA, using solid wire 0.5-4mm2 / AWG 20-12 or stranded wire, sizes 0.5-2.5mm2 / AWG 24-14. Wire insulation needs to be stripped 8mm. Wires may be fitted securely with crimped ferrules. Terminal screws need to be tightened down with a tightening torque of 0.45 Nm / 3.5 Lb-in.

Internal earthing connections should be made to the Internal Earth terminal in the base of the housing using a ring crimp terminal to secure the earth conductor under the earth clamp. The earth conductor should be at least equal in size and rating to the incoming power conductors but at least a mini mum of 0.82mm2 / 18AWG in size.
External earthing connections should be made to the M5 earth stud, using a ring crimp terminal to secure the earth conductor to the earth stud. The external earth conductor should be at least 4mm2 in size.

On completion of the installation the flameproof threaded joint should be inspected to ensure that they are clean and that they have not been damaged during installation.

Ensure the O-ring seal is in place and undamaged.

When fitting the flameproof cover ensure the thread is engaged correctly. Fully tighten the cover all the way, ensure no gap is visible between the cover and base of the sounder enclosure.

The cable entries have two M20 x 1.5 – 6H entry thread and a single ½” NPT thread. If the installation is made using cable glands, only suitably rated and certified cable glands must be used. They must be suitable for the type of cable being used and also meet the requirements of the current installation standards EN 60079-14 / IEC60079-14.

If the installation is made using conduit, openings must have a sealing fitting connected within 18” of enclosure.

Any unused cable entries must be closed with suitably rated and certified blanking plugs.

The plastic horn is not anti-static and the metallic enclosure has a non-conductive coating. These may generate an ignition-capable level of electrostatic charges under certain extreme conditions. The user should ensure that the equipment is not installed in a location where it may be subjected to external conditions that might cause a build-up of electrostatic charges on non-conducting surfaces.

Repair of the flameproof threaded joints and cemented joints is not permitted.

The Equipment must not be installed with the horn facing upwards of horizontal.

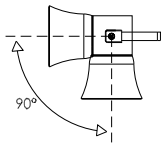

Only the explosionproof cover is to be used for access to the enclosure for installation, service and maintenance.

5) Product Mounting and Access

5.1 Mounting

The D1x Alarm Horn may be secured to any flat surface using at least two of the three or four 7mm fixing holes. The enclosure provides IP66 protection and is suitable for installation in exterior locations providing it is positioned so that water cannot collect in the horn, and the cable entry is sealed.

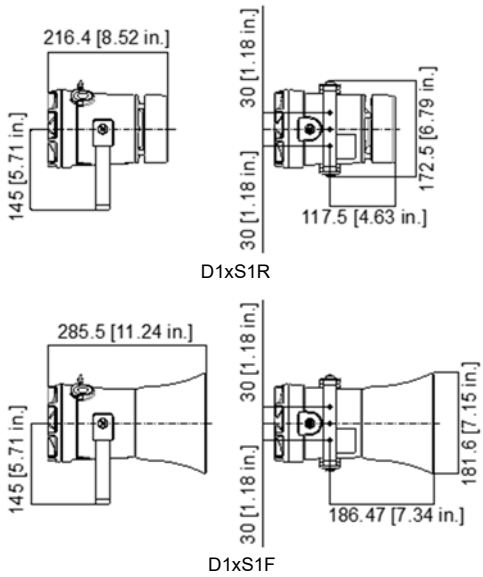

Fig 1: Mounting Locations

5.2 Installation procedure

a. Secure the D1x unit to a flat surface via the three 7mm fixing holes in the mounting bracket.
b. Remove the explosionproof cover of the alarm horn by unscrewing it, taking care not to damage the explosionproof threads in the process (Refer to section 5).
c. Fit an M20/NPT suitably rated cable gland or conduit entry into the hole in the enclosure and connect the field wiring to the appropriate alarm horn terminals as shown in fig. 6 (AC) or fig 5. (DC). The power supply terminals are duplicated so that units may be connected in parallel. An end of line monitoring resistor may be fitted to DC units only (see section 12). If the second and third M20/NPT entries are not used, suitably rated stopping plugs must always be fitted.
d. Replace the explosionproof cover of the loudspeaker, taking care not to damage the explosionproof threads. Tighten fully.

5.3 Hornless Variants

The D1x Sounder is also available as a variant with no horn fitted in the factory. The Horn threaded nose portion has a fitment thread of 1-3/8" – 18 UNF (to BS1580 or ANSI B1.1). The customer is responsible for sourcing and correctly fitting a suitable horn that meets all of the relevant safety requirements.

5.4 Access to the Explosionproof Enclosure

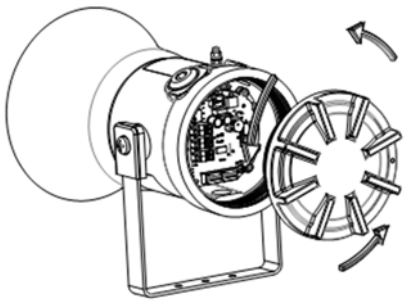

Fig 2: Accessing the enclosure

To access the Ex d chamber, loosen the M4 grub screw on the sounder cover. Open the enclosure by turning the sounder cover counterclockwise and remove the cover. Take extreme care not to damage the explosionproof threads in the process.

6) Installation Requirements

6.1 Safe Installation Requirements

Warning – High voltage may be present, risk of electric shock.
DO NOT open when energised, disconnect power before opening.

The sounder must only be installed by suitably qualified personnel in accordance with the latest issues of the relevant standards.

The product must only be installed by suitably qualified personnel in accordance with the latest issues of the relevant standards.

The installation of the units must also be in accordance with the NEC / CEC and any local regulations and should only be carried out by a competent electrical engineer who has the necessary training.

6.2 Cable Selection and Connections

When selecting the cable size, consideration must be given to the input current that each unit draws (see table 1), the number of sounders on the line and the length of the cable runs. The cable size selected must have the necessary capacity to provide the input current to all the sounders connected to the line.

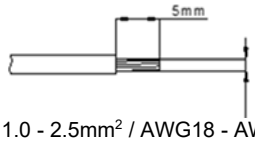

AC: 1.0 - 2.5mm^2 / AWG18 - AWG12
DC: 0.2 - 2.5mm^2 / AWG24 - AWG12

Figure 3: Wire Preparation.

When connecting wires to the terminals great care should be taken to dress the wires so that when the cover is inserted into the chamber the wires do not exert excess pressure on the terminal blocks. This is particularly important when using cables with large cross-sectional areas such as 2.5mm².

6.3 Earthing

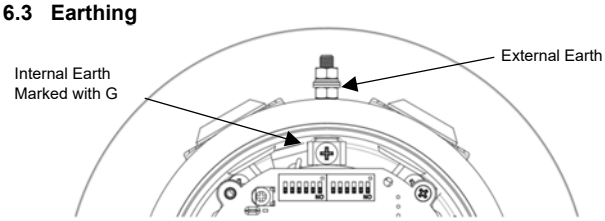

Figure 4: Earth locations..

Please note that for AC supply voltage product versions the Earth terminal on the PCBA does not provide an earth connection to the product enclosure. The enclosure must be independently earthed using either the external or internal earth fixing point, (see fig 4 and notes below).

The unit has both a primary internal and secondary external earth fixing point.

Internal earth connections should be made to the internal Earth terminal in the base of the housing using a ring crimp terminal to secure the earth conductor under the earth clamp.

External earth connections can be made to the M5 earth stud (see Fig. 4), using a ring crimp terminal to secure the earth conductor to the earth stud. The external earth conductor should be at least 4mm^2 in size.

The external earth crimp ring should be located between the two M5 plain washers provided and securely locked down with the M5 spring washer and M5 nut.

The earth conductor should be at least equal in size and rating to the incoming power conductors but at least a minimum of 0.82mm^2 / 18AWG in size.

6.4 Cable Glands, Blanking Elements & Adapters

Ingress Protection

If a high IP (Ingress Protection) rating is required then a suitable sealing washer must be fitted under the cable glands or blanking plugs. A minimum ingress protection rating of IP6X must be maintained for installations in explosive dust atmospheres.

To maintain the ingress protection rating and mode of protection, the cable entries must be fitted with suitably rated cable entry and/or blanking devices during installation.

If entries are fitted with adaptors they must be suitably rated for the application. Fitting of blanking elements into adaptors is not permitted.

Adapters

The GNEx sounder range can be supplied with the following types of adapters:

M20 to ½" NPT
M20 to ¾" NPT
M20 to M25

It is important to note that stopping plugs cannot be fitted onto adapters, only directly onto the M20 entries.

Any other adapters used must be suitably rated and certified.

If the installation is made using conduit, openings must have a sealing fitting connected as close as practical to the wall of the enclosure, but in no case more than the size of the conduit or 50mm, whichever is the lesser.

7) Settings

Following illustrations show the settings available for D1xS1 Alarm Horn Sounders. See schematic diagram D190-06-001 for details.

7.1 Configuration

See Table 1 for product power supply and Sound Pressure Levels (SPL).

Configuration for DC Units

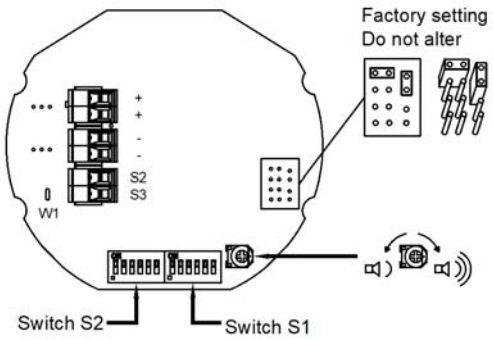

Figure 5: DC PCBA.

Configuration for AC Units

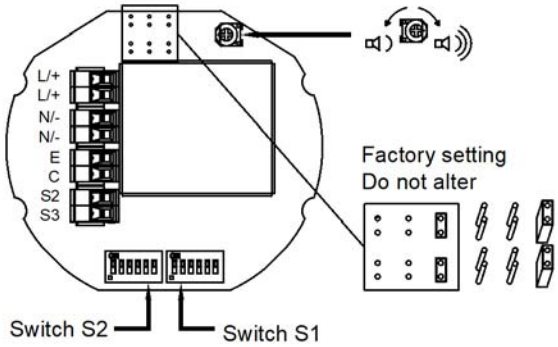

Figure 6: AC PCBA .

7.2 Stage Switching Polarity (DC Units)

Switching from positive switching (default) to negative switching - DC Only.

NOTE: Max supply is 33V DC – if higher DC voltage is required, use Negative switching.

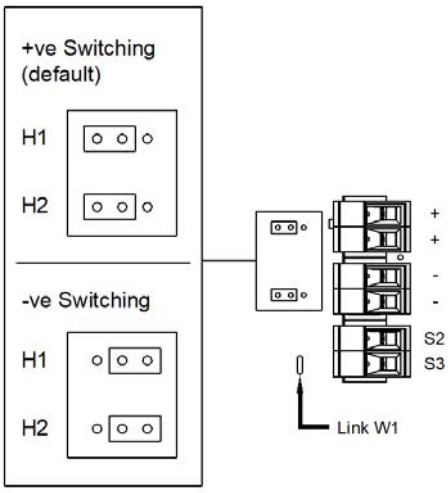

Figure 7: Stage Switching Polarity.

7.3 Tone Selection

The D1x Alarm Horn Sounders have 64 different tones that can be selected independently for the first and second stage alarms. The tones are selected by operation of the tone setting DIP switch 1 & DIP 2witch 2 (see figures 6 and 7) on the PCB, for stage 1 and stage 2 respectively.

Default = Switch 2
S2 - Tone 1
0 0 0 0 0 0

Default = Switch 1
S1 – Tone 44
1 1 0 1 0 1

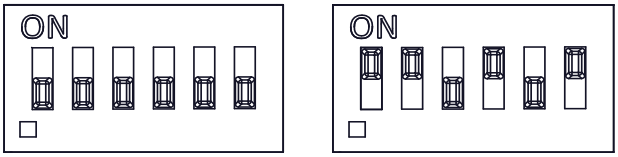

(ON = 1, OFF = 0)

Figure 8: DIP switch configuration

The sounder can also be switched to sound the third and fourth stage alarm tones.

The tone table (D221-95-001-IS) shows the switch positions for the 64 tones on first and second stages and which tones are available for the third and fourth stages dependent on the Stage 1 DIP switch setting.

Following table (Table 3) is a summary of DC: D190-06-001; AC: D190-06-005 wiring options.

Config.	Voltage	Configuration Description	Features	Product Option Identifier
1a	DC	Single Stage Configuration	• Line monitoring • Positive Switching	1
1b	DC	Two Stage Configuration	• Common Negative • Positive Switching	1
1c	DC	Three/Four Stage Configuration	• Common Negative • Positive Switching	1
2	DC	Three/Four Stages. Voltage Free 2nd, 3rd & 4th Stage Activation Configuration	• Common Positive • Customer Set H1 & H2 to Negative Switching	1
3	DC	Two Stage Configuration	• Independent Stage Input • Reverse Polarity Stage Monitoring	1
4	DC	Two Stage Configuration	• Independent power input for alarm stage activation of Stage 1 & 2. • Line monitoring available for each alarm stage – use suitable monitoring relays/modules. • Line monitoring requires common negative between each power input. • Line monitoring maximum voltage: 4Vdc. • Not to be used for reverse polarity line monitoring.	Y
5	DC	Two/Three Stage Voltage Free Activation Configuration		K
6	DC	Three/Four Stage Configuration	• Independent power input for alarm stage activation of Stage 1, 2 and 3 • Stage 4 can be activated via activation of Stage 2 and Stage 3 simultaneously • Line monitoring available for Stage 1, 2 & 3 alarm stage – use suitable monitoring relays/modules • Line monitoring requires common negative between each power input • Line monitoring maximum voltage: 4Vdc • Not to be used for reverse polarity line monitoring	V
1a	AC	Single Stage Configuration		1
1b	AC	Three/Four Stage Configuration		1
2	AC	Two/Three Stage Voltage Free Activation Configuration		K

Table 3: Summary of Wiring Options. See Document D190-06-001 for DC Schematic Diagrams; D190-06-005 for AC Schematic Diagrams.

8) End of Line Monitoring (DC Units)

8.1 Standard DC End Of Line Monitoring

All DC units have a blocking diode fitted in their supply input lines. An end of line monitoring diode or an end of line monitoring resistor can be connected across the +ve and –ve terminals in the flameproof chamber. If an end of line resistor is used it must have a minimum resistance value of 3k3 ohms and a minimum wattage of 0.5W or a minimum resistance value of 500 ohms and a minimum wattage of 2W.

The resistor must be connected directly across the +ve and -ve terminals as shown in the following drawing. The resistor leads should be kept as short as possible. See D190-06-001 for details.

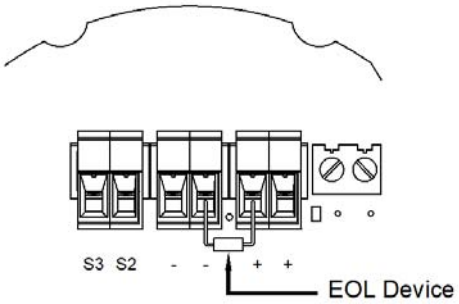

Figure 9: End of Line Resistor placement.

Note: For forward voltage polarity line monitoring the maximum voltage is 4Vdc. For wiring configuration 4 (product option Y) and configuration 6 (product option V) line monitoring requires common negative between each power input. For monitoring voltage, the installer should allow for system cabling and voltage drops

8.2 Custom DC Multi-Stage End Of Line Monitoring

An optional 12-way terminal module is available to enable up to four alarm stages to be activated from three DC voltage output channels. The three alarm stage activation inputs can be independently monitored.

Refer to Schematic D190-06-001, Config. 6.
Specify Product option 'V' when ordering.
Spare part code for field installation: SP78-0001

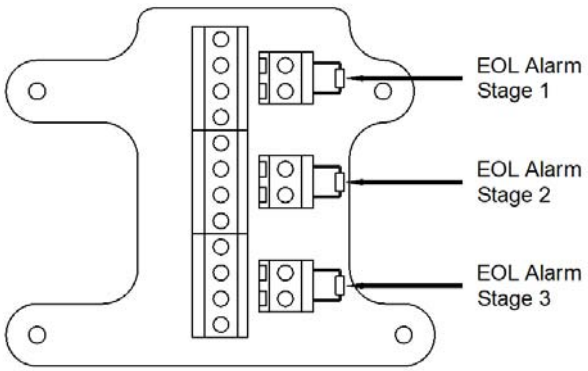

Figure 10: End of Line Resistor placement – Optional 12-Way Terminal Module.

9) Maintenance, Overhaul and Repair

Maintenance, repair and overhaul of the equipment should only be carried out by suitably qualified personnel in accordance with the current relevant standards:

Flameproof threaded joints and cemented joints are not permitted to be repaired.

Units must not be opened while an explosive atmosphere is present.

If opening the unit during maintenance operations, a clean environment must be maintained and any dust layer removed prior to opening the unit.

Potential electrostatic charging hazard – Clean only with a damp cloth.

10) SIL 2 Reliability Data

Reliability and Functional safety IEC/EN61508 which has been assessed and is considered suitable for use in low demand safety function:

1. Random Hardware Failures and Architectural constraints (route 2_H).
2. As an unvoted item (i.e. hardware fault tolerance of 0) at SIL 2.

The product was assessed against failure modes:

- Failure respond to an input by sounding sounder.
- Spurious sound output despite no input.

3. When employing the device in a SIL2 compliant system the user should ensure frequent or continuous automatic monitoring of continuity.

Integrity in respect of failure to function	SIL2 & SIL1
Total Failure rate	0.55 pmh
"Hazardous" failure rate (revealed)	0 pmh
"Hazardous" failure rate (unrevealed)	0.55 pmh
"Safe" failure rate (revealed)	0 pmh
"Safe" failure rate (unrevealed)	0
System type	B
Hardware Fault Tolerance	0
Diagnostic Coverage	>80%
PFD (hazardous failure)	2.4×10^{-3}
Proof Test Interval	Up to 1 year

· **All models are approved for use as Audible Signal Appliance for use as General Signaling: UL464A & CSA C22.2 No 205-17**
· Type 4 / 4X / 3R / 13, IP66
· -55°C to +85°C / -67°C to +176°F
General Signaling Canada:
D1xS1-AC230-A: -55°C to +40°C / -67°F to +104°F
D1xS1-DC024-A, D1xS1-DC024-S: -55°C to +85°C / -67°F to +185°F
· To maintain Ingress Protection, cable entries must be fitted with suitably rated cable glands or stopping plugs
· EOL Monitoring (DC Only): End of Line Devices may be fitted between the +ve & -ve terminals of the PCBA. Please ensure that the device legs meet the wire size range stated for the connection terminals and are fitted correctly in order to avoid a short. Refer to the compatible control panel specification for EOL device values and ratings

Model	Nominal Voltage	Voltage Range	P1 Nominal Operating Current#	P2 Nominal Operating Current#	P3 Nominal Operating Current#	P1 Max Operating RMS*	P2 Max Operating RMS*	P3 Max Operating RMS*
D1xS1-DC024-A	12V dc	11.5 - 54V dc	221mA	-	-	221mA	-	-
	24V dc		185mA	-	-			
	48V dc		115mA	-	-			
D1xS1-AC230-A	115V ac	100- 240V ac 50/60Hz	73mA	-	-	80mA	-	-
	230V ac		48mA	-	-			
*Max Operating current for worst-case input voltage; Nominal current at nominal voltage and Tone 12								
Table 4: UL General Signaling Electrical ratings								

Stage 1 Set DIP SW 1 Tone No.	Tone Description	Tone Visual	Stage 1 & 2 DIP SW 1/2 Settings 1 2 3 4 5 6	Stage 3 Set DIP SW 1 (S3)	Stage 4 Set DIP SW 1 (S2 + S3)
1	1000Hz PFEER Toxic Gas	1000Hz	0 0 0 0 0 0	2	44
2	1200/500Hz @ 1Hz DIN /PFEER P.T.A.P.	1200Hz 500Hz 1s	1 0 0 0 0 0	3	44
3	1000Hz @ 0.5Hz(1s on, 1soff) PFEER Gen. Alarm	1000Hz 1s 1s	0 1 0 0 0 0	2	44
4	1.4KHz-1.6KHz 1s, 1.6KHz-1.4KHz 0.5s NF C 48-265	1600Hz 1400Hz 1s 0.5s	1 1 0 0 0 0	24	1
5	544Hz(100mS)/440Hz (400mS) NF S 32-001	544Hz 440Hz 0.1s 0.4s	0 0 1 0 0 0	19	1
6	1500/500Hz - (0.5s on , 0.5s off) x3 + 1s gap AS4428	1500Hz 500Hz 0.5s 0.5s 0.5s 0.5s 0.5s 1s	1 0 1 0 0 0	44	1
7	500-1500Hz Sweeping 2 sec on 1 sec off AS4428	1500Hz 500Hz 2s 1s	0 1 1 0 0 0	44	1
8	500/1200Hz @ 0.26Hz (3.3son, 0.5s off) Netherlands - NEN 2575	1200Hz 500Hz 3s 0.5s	1 1 1 0 0 0	24	35
9	1000Hz (1s on, 1s off)x7 + (7s on, 1s off) IMO Code 1a	1000Hz 1s 1s 1s 1s 1s 1s 1s 1s 1s 1s 1s 1s 1s 7s 7s	0 0 0 1 0 0	34	1
10	1000Hz (1s on, 1s off)x7 + (7s on, 1s off) IMO Code 1a		1 0 0 1 0 0	34	1
11	420Hz(0.5s on, 0.5s off)x3 + 1s gap ISO 8201 Temporal Pattern	420Hz 0.5s 0.5s 0.5s 0.5s 0.5s 0.5s 1s	0 1 0 1 0 0	1	8
12	1000Hz(0.5s on, 0.5s off)x3 + 1s gap ISO 8201 Temporal Pattern	1000Hz 0.5s 0.5s 0.5s 0.5s 0.5s 0.5s 1s	1 1 0 1 0 0	1	8
13	422/775Hz - (0.85 on, 0.5 off) x3 + 1s gap NFPA - Temporal Coded	775Hz 422Hz 0.85 0.5s 0.85 0.5s 0.85 0.5s 1s	0 0 1 1 0 0	1	8
14	1000/2000Hz @ 1Hz Singapore	2000Hz 1000Hz 0.5s 0.5s	1 0 1 1 0 0	3	35
15	300Hz Continuous (f=300)	f(Hz)	0 1 1 1 0 0	24	35
16	440Hz Continuous (f=440)		1 1 1 1 0 0	24	35
17	470Hz Continuous (f=470)		0 0 0 0 1 0	24	35
18	500Hz Continuous IMO code 2 (Low) (f=500)		1 0 0 0 1 0	24	35
19	554Hz Continuous (f=554)		0 1 0 0 1 0	24	35
20	660Hz Continuous (f=660)		1 1 0 0 1 0	24	35
21	800Hz IMO code 2 (High) (f=800)		0 0 1 0 1 0	24	35
22	1200Hz Continuous (f=1200)		1 0 1 0 1 0	24	35
23	2000Hz Continuous (f=2000)		0 1 1 0 1 0	3	35
24	2400Hz Continuous (f=2400)		1 1 1 0 1 0	20	35
25	440Hz @0.83Hz (50 cycles/minute) Intermittent (f=440, a=0.6, b=0.6)	f(Hz) a(s) b(s)	0 0 0 1 1 0	44	8
26	470Hz @0.9Hz - 1.1s Intermittent (f=470, a=0.55, b=0.55)		1 0 0 1 1 0	44	8
27	470Hz @5Hz - (5 cycles/second) Intermittent (f=470, a=0.1, b=0.1)		0 1 0 1 1 0	44	8
28	544Hz @ 1.14Hz - 0.875s Intermittent (f=470, a=0.43, b=0.44)		1 1 0 1 1 0	24	8
29	655Hz @ 0.875Hz Intermittent (f=655, a=0.57, b=0.57)		0 0 1 1 1 0	44	8
30	660Hz @0.28Hz - 1.8sec on, 1.8sec off Intermittent (f=660, a=1.8, b=1.8)		1 0 1 1 1 0	24	8
31	660Hz @3.34Hz - 150mS on, 150mS off Intermittent (f=660, a=0.15, b=0.15)		0 1 1 1 1 0	24	8
32	745Hz @ 1Hz Intermittent (f=745, a=0.5, b=0.5)		1 1 1 1 1 0	24	8
33	800Hz - 0.25sec on, 1 sec off Intermittent (f=800, a=0.25, b=1)		0 0 0 0 0 1	24	8
34	800Hz @ 2Hz IMO code 3.a (High) Intermittent (f=800, a=0.25, b=0.25)		1 0 0 0 0 1	24	8
35	1000Hz @ 1Hz Intermittent (f=1000, a=0.5, b=0.5)		0 1 0 0 0 1	24	8
36	2400Hz @ 1Hz Intermittent (f=2400, a=0.5, b=0.5)		1 1 0 0 0 1	24	8
37	2900Hz @ 5Hz Intermittent (f=2900, a=0.1, b=0.1)		0 0 1 0 0 1	24	8
38	363/518Hz @ 1Hz Alternating (f=363, f1=518, a=0.1)	f1(Hz) f(Hz) a(s) a(s)	1 0 1 0 0 1	8	19
39	450/500Hz @ 2Hz Alternating (f=450, f1=500, a=0.25)		0 1 1 0 0 1	8	19
40	554/440Hz @ 1Hz Alternating (f=440, f1=554, a=0.5)		1 1 1 0 0 1	24	19
41	554/440Hz @ 0.625Hz Alternating (f=440, f1=554, a=0.8)		0 0 0 1 0 1	8	19
42	561/760Hz @0.83Hz (50 cycles/minute) Alternating (f=561, f1=760, a=0.6)		1 0 0 1 0 1	8	19
43	780/600Hz @ 0.96Hz Alternating (f=600, f1=780, a=0.52)	f1(Hz) f(Hz) a(s) a(s)	0 1 0 1 0 1	8	19
44	800/1000Hz @ 2Hz Alternating (f=800, f1=1000, a=0.25)	f1(Hz) f(Hz) a(s) a(s)	1 1 0 1 0 1	24	19
45	970/800Hz @ 2Hz Alternating (f=800, f1=970, a=0.25)	f1(Hz) f(Hz) a(s) a(s)	0 0 1 1 0 1	8	19
46	800/1000Hz @ 0.875Hz Alternating (f=800, f1=1000, a=0.57)	f1(Hz) f(Hz) a(s) a(s)	1 0 1 1 0 1	24	19
47	2400/2900Hz @ 2Hz Alternating (f=2400, f1=2900, a=0.25)		0 1 1 1 0 1	24	19
48	500/1200Hz @ 0.3Hz Sweeping (f=500, f1=1200, a=3.34)	f1(Hz) f(Hz) a(s)	1 1 1 1 0 1	24	12
49	560/1055Hz @ 0.18Hz Sweeping (f=560, f1=1055, a=5.47)		0 0 0 0 1 1	24	12
50	560/1055Hz @ 3.3Hz Sweeping (f=560, f1=1055, a=0.3)		1 0 0 0 1 1	24	12
51	600/1250Hz @ 0.125Hz Sweeping (f=600, f1=1250, a=8)	f1(Hz) f(Hz) a(s)	0 1 0 0 1 1	24	12
52	660/1200Hz @ 1Hz Sweeping (f=660, f1=1200, a=1)	f1(Hz) f(Hz) a(s)	1 1 0 0 1 1	24	12
53	800/1000Hz @ 1Hz Sweeping (f=800, f1=1000, a=1)		0 0 1 0 1 1	24	12
54	800/1000Hz @ 7Hz Sweeping (f=800, f1=1000, a=0.14)		1 0 1 0 1 1	24	12
55	800/1000Hz @ 50Hz Sweeping (f=800, f1=1000, a=0.02)		0 1 1 0 1 1	24	12
56	2400/2900Hz @ 7Hz Sweeping (f=2400, f1=2900, a=0.14)		1 1 1 0 1 1	24	12
57	2400/2900Hz @ 1Hz Sweeping (f=2400, f1=2900, a=1)		0 0 0 1 1 1	24	12
58	2400/2900Hz @ 50Hz Sweeping (f=2400, f1=2900, a=0.02)		1 0 0 1 1 1	24	12
59	2500/3000Hz @ 2Hz Sweeping (f=2500, f1=3000, a=0.5)		0 1 0 1 1 1	24	12
60	2500/3000Hz @ 7.7Hz Sweeping (f=2500, f1=3000, a=0.13)		1 1 0 1 1 1	24	12
61	800Hz Motor Siren (f=800, a=1.6)	f(Hz) a(s)	0 0 1 1 1 1	24	12
62	1200Hz Motor Siren (f=1200, a=2)		1 0 1 1 1 1	24	
63	2400Hz Motor Siren (f=2400, a=1.7)		0 1 1 1 1 1	24	12
64	Simulated Bell	1450Hz 0.25s 0.69ms	1 1 1 1 1 1	21	12

ISSUE	MOD No.	REASON - INITIAL - DATE
1		INTRODUCTION RSR - 19/01/2022
2	ACN0141	EOL VALUES AMENDED RSR - 20/12/2023
3	ACN0153	OPTIONS Y & V MONITORING DETAILS RSR - 06/06/2024

R1 — OPTIONAL LINE MONITORING RESISTOR, CUSTOMER SUPPLIED,
MINIMUM EOL RESISTOR VALUES
500Ω MIN AT 2W MIN OR 3.3KΩ MIN AT 0.5W MIN

Single Stage Configuration — Config.: 1a

Line Monitoring
Set to positive switching (default)

Stage 1: Apply Power to Stage 1 +ve & Stage 1 -ve

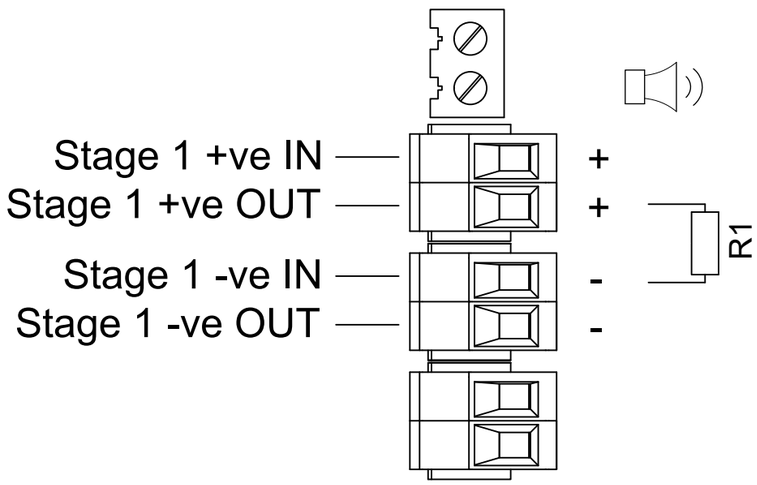

Two Stage Configuration — Config.: 1b

Common Negative
Set to positive switching (default)

Stage 1: Apply Power to Stage 1 +ve & Common -ve
Stage 2: Apply Power to Stage 2 +ve & Common -ve

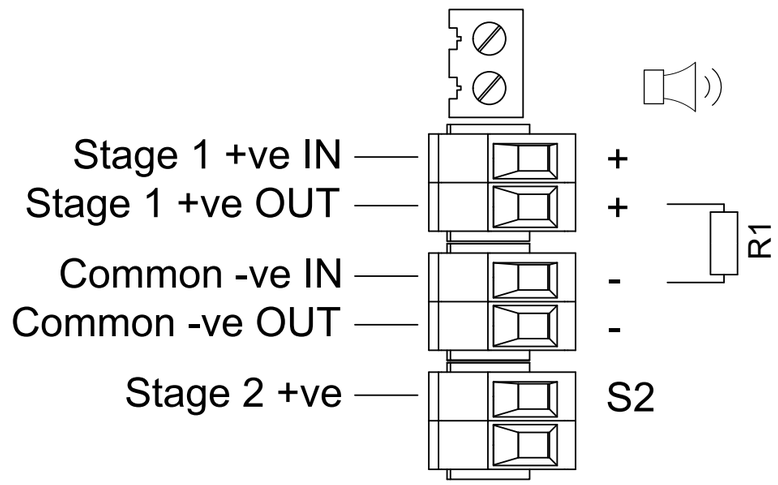

Three/Four Stage Configuration — Config.: 1c

Common Negative
Set to positive switching (default)

Stage 1: Apply Power to Stage 1 +ve & Common -ve
Stage 2: Apply Power to Stage 2 +ve &Common -ve
Stage 3: Apply Power to Stage 3 +ve &Common -ve
Stage 4: Apply Power to Stage 2 +ve, Stage 3 +ve & Common -ve

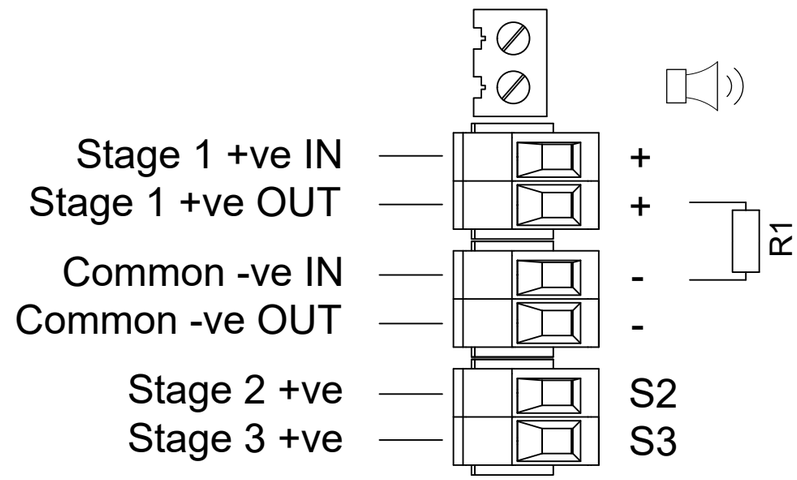

DRAWING TO BS8888:2000
GEOMETRIC TOLERANCES TO ISO1101:1983
LINEAR DIMENSIONAL TOLS
ANGULAR DIMENSIONAL TOLS

STANDARDS
D1x

DRAWN R.S.RAIT	DATE 19/01/2022	
CHECKED B.ISARD	DATE 19/01/2022	
APPROVED R.N.POTTS	DATE 19/01/2022	

SURFACE FINISH | WEIGHT (Kg)
MATERIAL
ALTERNATIVE MATERIAL

e2S warning signals
EUROPEAN SAFETY SYSTEMS LTD
IMPRESS HOUSE
MANSELL ROAD
ACTON
LONDON W3 7QH
WWW.E2S.COM

ALL DIMENSIONS IN MM
IF IN DOUBT, ASK - DO NOT SCALE

A3

TITLE D1xS1 / D1xS2 / GNExS1 / GNExS2 / STExS1 / STExS2 DC SOUNDER WIRING DIAGRAMS

SCALE	SHEET	DRAWING NUMBER
NTS	1 OF 3	D190-06-001

ISSUE	MOD No.	REASON - INITIAL - DATE
1		INTRODUCTION RSR - 19/01/2022
2	ACN0141	EOL VALUES AMENDED RSR - 20/12/2023
3	ACN0153	OPTIONS Y & V MONITORING DETAILS RSR - 06/06/2024

R1 OPTIONAL LINE MONITORING RESISTOR, CUSTOMER SUPPLIED,
MINIMUM EOL RESISTOR VALUES
500Ω MIN AT 2W MIN OR 3.3KΩ MIN AT 0.5W MIN

SWITCHES FOR STAGE OPERATION
CUSTOMER SUPPLIED

Three/Four Stages. Voltage Free 2nd, 3rd & 4th Stage Activation Configuration — Config.: 2

Common Positive
Customer Set H1 & H2 to Negative Switching (See Below)

Stage 1: Apply Power to Common +ve & Stage 1 -ve
Stage 2: Apply Power to Common +ve & Stage 1 -ve & connect Stage 2 -ve to Stage 1 -ve
Stage 3: Apply Power to Common +ve & Stage 1 -ve & connect Stage 3 -ve to Stage 1 -ve
Stage 4: Apply Power to Common +ve & Stage 1 -ve
& connect Stage 2 -ve & Stage 3 -ve to Stage 1 -ve

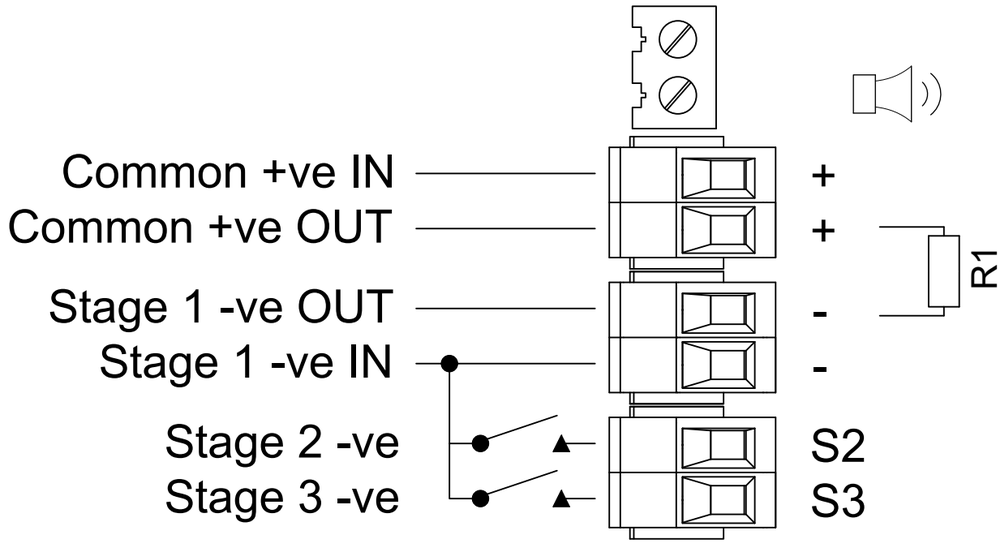

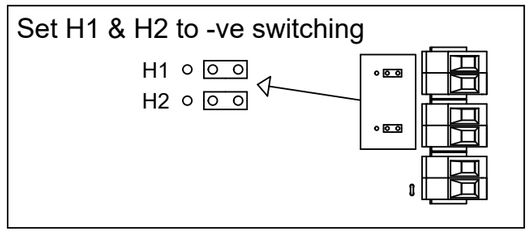

Two Stage Configuration — Config.: 3

Independent Stage Input
Reverse Polarity Stage Monitoring

Stage 1: Apply Power to Stage 1 +ve & Stage 1 -ve
Stage 2: Apply Power to Stage 1 +ve & Stage 1 -ve & connect Stage 2 -ve to Stage 1 -ve

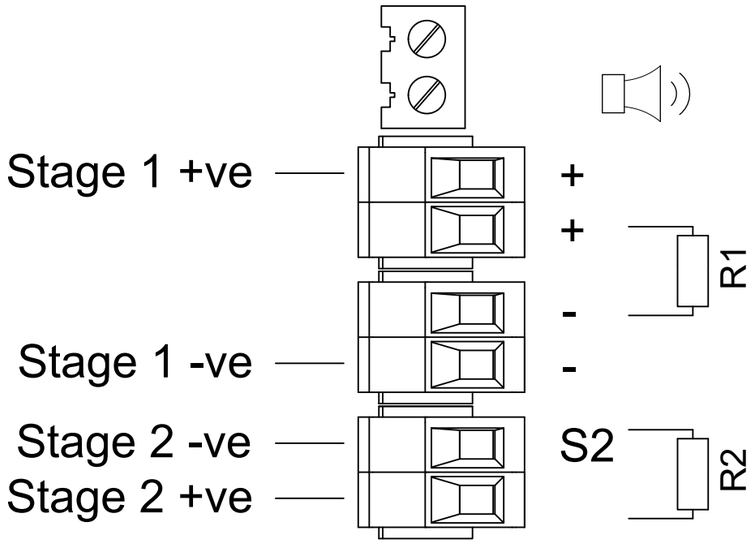

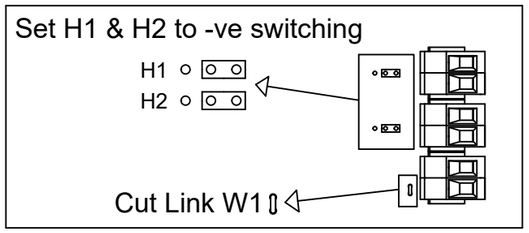

DRAWING TO BS8888:2000
GEOMETRIC TOLERANCES TO ISO1101:1983
LINEAR DIMENSIONAL TOLS
ANGULAR DIMENSIONAL TOLS

STANDARDS
D1x

DRAWN	R.S.RAIT	DATE 19/01/2022
CHECKED	B.ISARD	DATE 19/01/2022
APPROVED	R.N.POTTS	DATE 19/01/2022

SURFACE FINISH | WEIGHT (Kg)
MATERIAL
ALTERNATIVE MATERIAL

e2S warning signals
EUROPEAN SAFETY SYSTEMS LTD
IMPRESS HOUSE
MANSELL ROAD
ACTON
LONDON W3 7QH
WWW.E2S.COM

ALL DIMENSIONS IN MM
IF IN DOUBT, ASK -
DO NOT SCALE

A3

TITLE D1xS1 / D1xS2 / GNExS1 / GNExS2 / STExS1 / STExS2 DC SOUNDER WIRING DIAGRAMS

SCALE	SHEET	DRAWING NUMBER
NTS	2 OF 3	D190-06-001

ISSUE	MOD No.	REASON - INITIAL - DATE
1		INTRODUCTION RSR - 19/01/2022
2	ACN0141	EOL VALUES AMENDED RSR - 20/12/2023
3	ACN0153	OPTIONS Y & V MONITORING DETAILS RSR - 06/06/2024

R1 OPTIONAL LINE MONITORING RESISTOR, CUSTOMER SUPPLIED,
MINIMUM EOL RESISTOR VALUES
500Ω MIN AT 2W MIN OR 3.3KΩ MIN AT 0.5W MIN

SWITCHES FOR STAGE OPERATION
CUSTOMER SUPPLIED

Two Stage Configuration — Config.: 4

Independent power input for alarm stage activation.
Line monitoring available for Stage 1 & 2 alarm stage.
Line monitoring requires common negative between each power input.
Line monitoring maximum voltage: 4Vdc.
Not to be used for reverse polarity line monitoring.

Stage 1: Apply Power to Stage 1 +ve & Stage 1 -ve
Stage 2: Apply Power to Stage 2 +ve & Stage 2 -ve

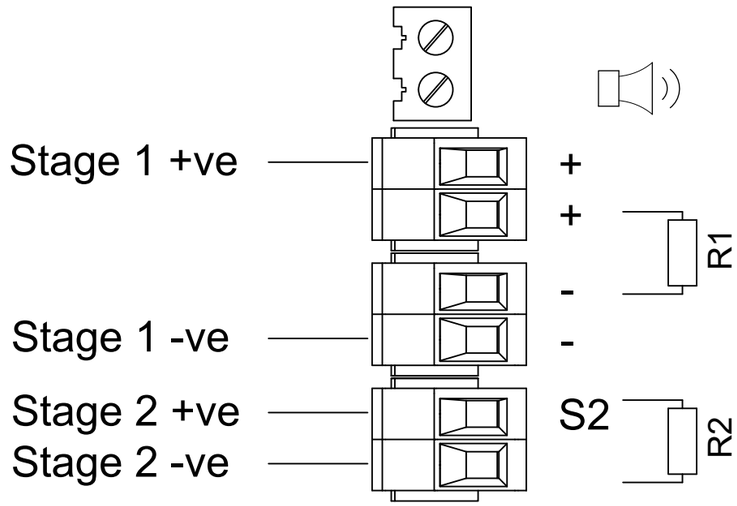

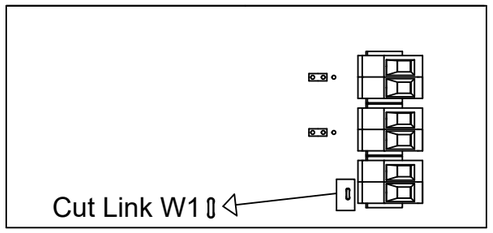

CUSTOM CONFIGURATION PRODUCT OPTION 'Y'

Two/Three Stage Voltage Free Activation Configuration — Config.: 5

Customer Set H1 & H2 to Negative Switching (See Below)

Power: +ve & -ve
Stage 1: Connect Stage 1 -ve to Common -ve
Stage 2: Cconnect Stage 2 -ve to Common -ve
Stage 3: Connect both Stage 1 -ve & Stage 2 -ve to Common -ve

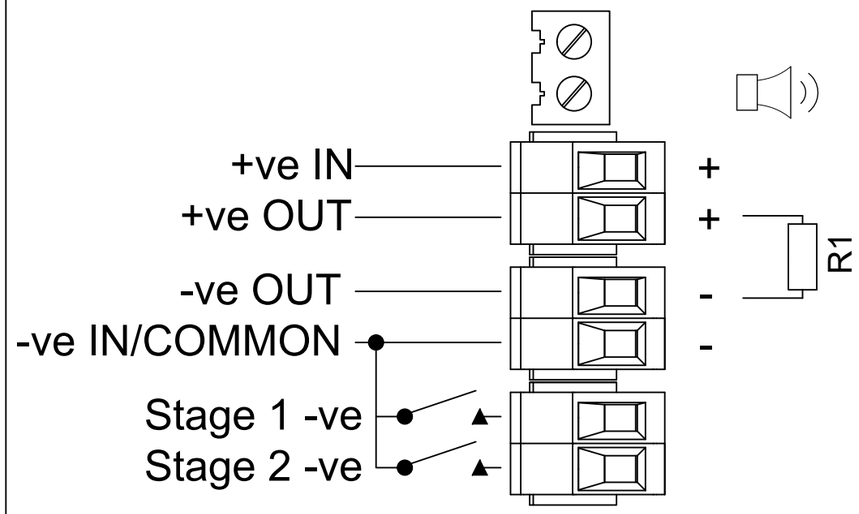

Set H1 & H2 to -ve switching

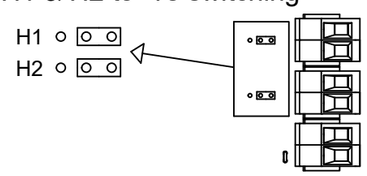

CUSTOM CONFIGURATION PRODUCT OPTION 'K'

Three/Four Stage Configuration — Config.: 6

Independent power input for alarm stage activation.
Line monitoring available for Stage 1, 2 & 3 alarm stage.
Line monitoring requires common negative between each power input.
Line monitoring maximum voltage: 4Vdc.
Not to be used for reverse polarity line monitoring.

Stage 1: Apply Power to Stage 1 +ve & Stage 1 -ve
Stage 2: Apply Power to Stage 2 +ve & Stage 2 -ve
Stage 3: Apply Power to Stage 3 +ve & Stage 3 -ve
Stage 4: Apply Power to Stage 2 +ve & Stage 2 -ve
& Apply Power to Stage 3 +ve & Stage 3 -ve

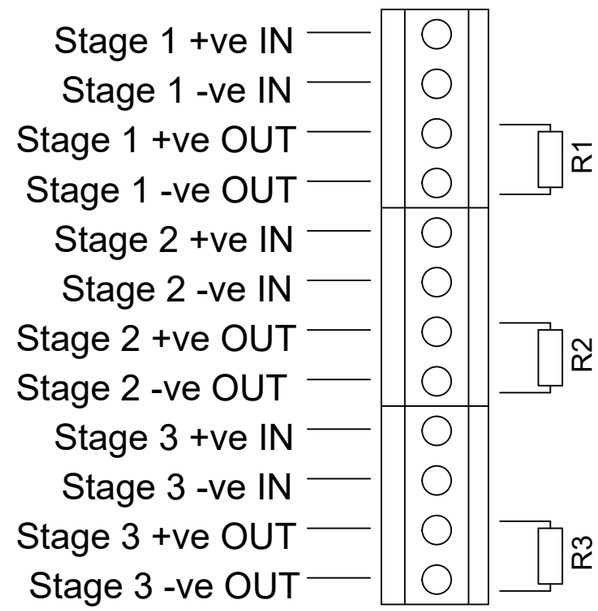

(CONFIGURATION SHOWS OPTIONAL ADDITIONAL TERMINAL PCBA - PRODUCT OPTION 'V')

DRAWING TO BS8888:2000
GEOMETRIC TOLERANCES TO ISO1101:1983
LINEAR DIMENSIONAL TOLS
ANGULAR DIMENSIONAL TOLS

STANDARDS
D1x

DRAWN	R.S.RAIT	DATE 19/01/2022
CHECKED	B.ISARD	DATE 19/01/2022
APPROVED	R.N.POTTS	DATE 19/01/2022

SURFACE FINISH | WEIGHT (Kg)
MATERIAL
ALTERNATIVE MATERIAL

e2S warning signals
EUROPEAN SAFETY SYSTEMS LTD
IMPRESS HOUSE
MANSELL ROAD
ACTON
LONDON W3 7QH
WWW.E2S.COM

ALL DIMENSIONS IN MM
IF IN DOUBT, ASK - DO NOT SCALE

A3

TITLE D1xS1 / D1xS2 / GNExS1 / GNExS2 / STExS1 / STExS2 DC SOUNDER WIRING DIAGRAMS

SCALE	SHEET	DRAWING NUMBER
NTS	3 OF 3	D190-06-001

ISSUE	MOD No	REASON - INITIAL - DATE
1		INTRODUCTION RSR - 19/01/2022

SWITCHES FOR STAGE OPERATION
CUSTOMER SUPPLIED

Single Stage Configuration — Config.: 1a

Stage 1: Apply Power to Stage 1 Live & Stage 1 Neutral

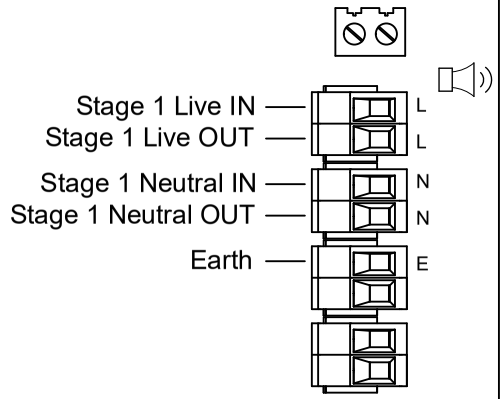

Three/Four Stage Configuration — Config.: 1b

Stage 1: Apply Power to Live & Neutral
Stage 2: Apply Power to Live & Neutral
& connect Stage 2 to Common
Stage 3: Apply Power to Live & Neutral
& connect Stage 3 to Common
Stage 4: Apply Power to Live & Neutral
& connect both Stage 2 & Stage 3 to Common

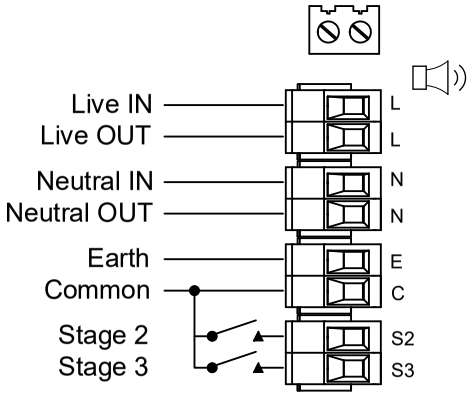

Two Stage Voltage Free Activation Configuration — Config.: 2

Power: Live & Neutral
Stage 1: Connect Stage 1 to Common
Stage 2: Connect Stage 2 to Common
Stage 3: Connect both Stage 1 & Stage 2 to Common

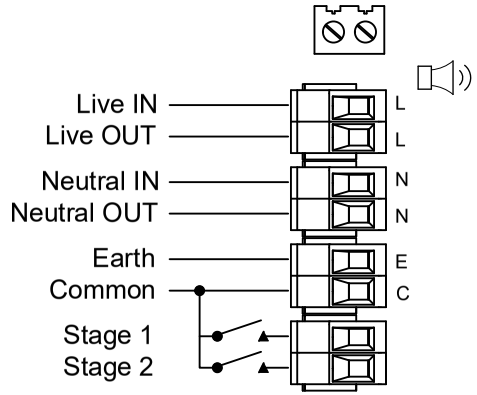

CUSTOM CONFIGURATION PRODUCT OPTION 'K'

DRAWING TO BS8888:2000
GEOMETRIC TOLERANCES TO ISO1101:1983
LINEAR DIMENSIONAL TOLS
ANGULAR DIMENSIONAL TOLS

STANDARDS
D1x

DRAWN	R.S.RAIT	DATE 19/01/2022
CHECKED	B.ISARD	DATE 19/01/2022
APPROVED	R.N.POTTS	DATE 19/01/2022

SURFACE FINISH | WEIGHT (Kg)
MATERIAL
ALTERNATIVE MATERIAL

e2S warning signals
EUROPEAN SAFETY SYSTEMS LTD
IMPRESS HOUSE
MANSELL ROAD
ACTON
LONDON W3 7QH
WWW.E2S.COM

ALL DIMENSIONS IN MM
IF IN DOUBT, ASK - DO NOT SCALE

A3

TITLE D1xS1 / D1xS2 / GNExS1 / GNExS2 / STExS1 / STExS2 AC SOUNDER WIRING DIAGRAMS

SCALE	SHEET	DRAWING NUMBER
NTS	1 OF 1	D190-06-005